arXiv:0909.5473v2 [math.SP] 2 Mar 2010

EIGENVALUE INEQUALITIES FOR MIXED STEKLOV PROBLEMS

RODRIGO BAÑUELOS, TADEUSZ KULCZYCKI, IOSIF POLTEROVICH, AND BARTŁOMIEJ SIUDEJA

Abstract. We extend some classical inequalities between the Dirichlet and Neumann eigenvalues of the Laplacian to the context of mixed Steklov–Dirichlet and Steklov–Neumann eigenvalue problems. The latter one is also known as the sloshing problem, and has been actively studied for more than a century due to its importance in hydrodynamics. The main results of the paper are applied to obtain certain geometric information about nodal sets of sloshing eigenfunctions. The key ideas of the proofs include domain monotonicity for eigenvalues of mixed Steklov problems, as well as an adaptation of Filonov's method developed originally to compare the Dirichlet and Neumann eigenvalues.

1. Introduction and main results

1.1. **Mixed Steklov problems.** Let W be a bounded domain in $\mathbb{R}^d$ satisfying the following assumptions:

(I) *W is Lipschitz and $W \subset \{(x,y) : x \in \mathbb{R}^{d-1},\ y < 0\}$.*

(II) *Its boundary ∂W consists of two sets F and B with $B = \partial W \setminus F$ and $F = F' \times \{0\} \subset \mathbb{R}^{d-1} \times \{0\}$, where F' is a bounded Lipschitz domain in $\mathbb{R}^{d-1}$ (see Figure 1).*

Consider the following two eigenvalue problems on the domain W:

(1) The mixed Steklov–Neumann problem:

$$\begin{cases} \Delta v(x,y) = 0, & (x,y) \in W, \\ \dfrac{\partial v}{\partial y}(x,0) = \mu\, v(x,0), & (x,0) \in F, \\ \dfrac{\partial v}{\partial \nu}(x,y) = 0, & (x,y) \in B. \end{cases} \tag{1.1.1}$$

R. Bañuelos was supported in part by NSF Grant # 0603701-DMS.
T. Kulczycki was supported in part by MNiSW grant # N N201 373136.
I. Polterovich was supported in part by NSERC, FQRNT and Canada Research Chairs program.

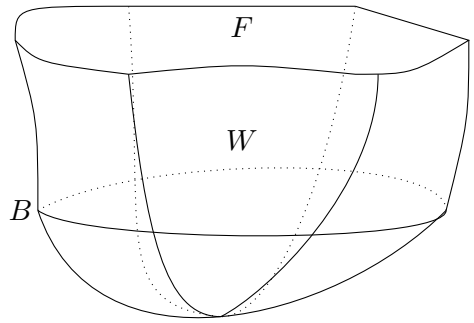

FIGURE 1. *Domain W with boundary $\partial W = F \cup B$.*

(2) The mixed Steklov–Dirichlet problem:

$$\begin{cases} \Delta u(x,y) = 0, & (x,y) \in W, \\ \dfrac{\partial u}{\partial y}(x,0) = \lambda\, u(x,0), & (x,0) \in F, \\ u(x,y) = 0, & (x,y) \in B. \end{cases} \tag{1.1.2}$$

We note that because of the Lipschitz boundary, the $(d-1)$-dimensional Lebesgue measure (surface area measure) σ is well defined on ∂W and that the outward unit normal vector field ν is well defined at almost all points of B with respect to σ. We understand that the equality $\partial v/\partial \nu = 0$ in (1.1.1) is satisfied for all points $(x,y) \in B$ for which ν is defined. At the same time, as indicated in Remark 1.1.5 below, for the weak formulation of the Steklov–Neumann problem one does not need to assume that B is Lipschitz.

It is well known (see, for example, [3, p. 69], [26, Theorem 1, p. 270], [15, p. 34, p. 250]) that under our assumptions the Steklov–Neumann eigenvalue problem (1.1.1) has discrete spectrum $\{\mu_n\}_{n=1}^{\infty}$,

$$0 = \mu_1 < \mu_2 \le \mu_3 \le \ldots \to \infty.$$

Note that the first nonzero Steklov–Neumann eigenvalue is denoted by μ_2 (some other papers use a different convention). The eigenvalues μ_n admit the following variational characterization:

$$\mu_n = \inf_{V_n \subset H^1(W)} \sup_{0 \neq v \in V_n} \frac{\int_W |\nabla v(x,y)|^2\, dx\, dy}{\int_{F'} v^2(x,0)\, dx}, \tag{1.1.3}$$

where the infimum is taken over all n-dimensional subspaces V_n of the Sobolev space $H^1(W)$. The corresponding eigenfunctions we denote by v_n, $n = 1, 2, \ldots$.

Similarly, it is known (see [1]) that the Steklov–Dirichlet eigenvalue problem (1.1.2) has discrete spectrum $\{\lambda_n\}_{n=1}^{\infty}$,

$$0 < \lambda_1 \le \lambda_2 \le \lambda_3 \le \ldots \to \infty$$

and the eigenvalues admit the following variational characterization:

$$\lambda_n = \inf_{U_n \subset H_0^1(W,B)} \sup_{0 \neq u \in U_n} \frac{\int_W |\nabla u(x,y)|^2 \, dx \, dy}{\int_{F'} u^2(x,0) \, dx}, \tag{1.1.4}$$

where the infimum is taken over all n-dimensional subspaces U_n of the space $H_0^1(W,B) = \{u \in H^1(W) : u \equiv 0 \text{ on } B\}$. The corresponding eigenfunctions we denote by u_n, $n = 1, 2, \ldots$.

Remark 1.1.5. One may weaken the assumption (I) that W is a Lipschitz domain and still guarantee that the problems (1.1.2) and (1.1.1) have discrete spectrum. In fact, in the Steklov–Dirichlet case, no regularity of the boundary is required. In the Steklov–Neumann case it suffices to assume that F' is Lipschitz and that there exists a Lipschitz domain $V \subset W$ such that $\partial V \cap \{y = 0\} = F'$. In both cases the result follows immediately from domain monotonicity for mixed Steklov eigenvalues (see sections 3.1 and 3.2) and [5, Theorem 4.5.2].

1.2. **Main results.** Let $W \subset \mathbb{R}^d$ be a domain satisfying the assumptions (I) and (II). Following [20, section 3.2.1], we say that W satisfies the *(standard) John's condition* if $W \subset F' \times (-\infty, 0)$.

Definition 1.2.1. We say that W satisfies the *weak John's condition* if

$$\int_W e^{ay} \, dx \, dy \le \frac{|F'|}{a}, \text{ for any } a > 0, \tag{1.2.2}$$

where $|F'|$ is the $(d-1)$-dimensional Lebesgue measure of F'.

It is easy to check that the standard John's condition implies the weak John's condition (the converse is not true, as seen from the example constructed in section 2.2). Indeed, if $W \subset F' \times (-\infty, 0)$, then for any $a > 0$,

$$\int_W e^{ay} \, dx \, dy \le \int_{F'} dx \int_{-\infty}^{0} e^{ay} \, dy = \frac{|F'|}{a}.$$

Let us formulate the main results of the paper.

Theorem 1.2.3. *Consider the eigenvalue problems* (1.1.1) *and* (1.1.2) *on a domain* $W \subset \mathbb{R}^d$ *satisfying the weak John's condition* (1.2.2). *Then for any* $n \in \mathbb{N}$ *we have*

$$\mu_{n+1} < \lambda_n \text{ if } \quad d \ge 3,$$
$$\mu_{n+1} \le \lambda_n \text{ if } \quad d = 2.$$

The proof of Theorem 1.2.3 is based on an adaptation of the argument due to Filonov [8]. It is presented in section 4.2. Note that the weak John's condition is essential for Theorem 1.2.3 to hold, see sections 2.3 and 2.4.

Theorem 1.2.4. *Consider the eigenvalue problems* (1.1.1) *and* (1.1.2) *on a domain* $W \subset \mathbb{R}^d$, $d \geq 2$, *satisfying the standard John's condition. Then for any* $n \in \mathbb{N}$ *we have*

$$\mu_{n+1} < \lambda_n. \tag{1.2.5}$$

Moreover, if $F' \subset \mathbb{R}^{d-1}$ *is a convex set, then*

$$\mu_{n+d-1} < \lambda_n. \tag{1.2.6}$$

The proof of Theorem 1.2.4 presented in section 4.1 is quite short: it uses domain monotonicity for eigenvalues of mixed Steklov problems (see sections 3.1 and 3.2), the properties of mixed Steklov eigenvalues for cylindrical domains (see section 2.1), and the classical inequalities between the Dirichlet and Neumann eigenvalues [11, 8, 23].

Remark 1.2.7. Theorems 1.2.3 and 1.2.4 are also valid for unbounded domains W satisfying the weak and the standard John's conditions, respectively, provided the problems (1.1.1) and(1.1.2) have discrete spectra. In order to guarantee that the spectrum is discrete, one has to impose an additional constraint: the solutions must have a gradient decaying sufficiently fast at infinity (see [13]). A classical example of a sloshing problem on an unbounded domain is the "ice fishing problem" described in section 2.4.

1.3. **Discussion.** The eigenvalue problem (1.1.1) has important applications to hydrodynamics and is also known as the *sloshing problem* (see, for example, [14] and references therein).

For $d = 3$, it models free fluid oscillations in a container W with bottom B and a free surface of a steady fluid F (see Figure 1). This problem was first studied by Euler [7] as early as 1761 and has since been the topic of a great number of papers. We refer to [9] for a historical review of this subject. Earlier results on the sloshing problem are described by Lamb [22] in his book *Hydrodynamics*. For more recent developments, the reader may consult the books [15] and [20], as well as the papers [16], [17], and [21]. The sloshing problem is the main motivation to study (1.1.1) and, in particular, it justifies our assumptions on the domains W, F and B.

For $d = 2$, the eigenvalue problem (1.1.1) describes oscillations of a 2-dimensional free fluid in a channel with uniform cross-section W. Here B is the uniform cross-section of the bottom of the channel and F is the

uniform cross-section of the free surface of the steady fluid. Free fluid oscillations are assumed here to be 2-dimensional and identical for all the cross-sections of the channel. In [18], some properties of the first nontrivial eigenfunction for the 2-dimensional sloshing problem were established. To obtain these properties, the inequality $\mu_2 \leq \lambda_1$ was proved there for the case $d = 2$. It was conjectured in [18, Conjecture 4.3] that the inequality $\mu_{n+1} \leq \lambda_n$ should hold for $d = 2$ (note that in [18] a different notation $\nu_n = \mu_{n+1}$ was used). Theorem 1.2.3 for $d = 2$ gives a positive answer to this conjecture.

Eigenvalue problems (1.1.1) and (1.1.2) are used as well to model some other physical processes. For instance, they describe the stationary heat distribution in W under the conditions that the heat flux through F is proportional to the temperature (see [3]), and the part B of the boundary is either perfectly insulated (in (1.1.1)) or kept under zero temperature (in (1.1.2)).

The boundary value problems (1.1.1) and (1.1.2) also have interesting probabilistic interpretations in terms of jump processes on F which arise as traces of Brownian motion in W. Roughly speaking, μ_n and $v_n|_F$ are the eigenvalues and eigenfunctions of the generator of the jump process which is the trace on F of the Brownian motion in W with reflection on ∂W. Similarly, λ_n and $u_n|_F$ are the eigenvalues and eigenfunctions of the generator of the jump process which is the trace on F of the Brownian motion in W with killing on B and reflection on F. The connection between the mixed Steklov problem (1.1.2) and the eigenvalues and eigenfunctions of the generator of the d-dimensional Cauchy process (which is the trace of the $(d+1)$-dimensional Brownian motion) in some domains is described in detail in [2].

Finally, it is worth pointing out here that Steklov type eigenvalue problems have attracted considerable attention in recent years. For some of this literature, see [3], [6], [1], [16], [17], [21], [12], [10].

1.4. **Nodal sets of sloshing eigenfunctions.** Let

$$\mathcal{N}_f = \{x|\, f(x) = 0\}$$

denote the *nodal set* of a function f. The following lemma is a simple consequence of domain monotonicity for eigenvalues of mixed Steklov problems. Recall that $B = \partial W \setminus F$ and set $B_0 = \partial W \setminus \overline{F}$.

Lemma 1.4.1. *Let ϕ be an eigenfunction of the sloshing problem* (1.1.1) *on a domain W satisfying the assumptions (I) and (II). Suppose that ϕ corresponds to an eigenvalue $\mu \leq \lambda_1$, where λ_1 is the first eigenvalue of the Steklov–Dirichlet problem* (1.1.2)*. Let $C \subset \mathcal{N}_\phi$ be a connected*

component of the nodal set of ϕ. Then $C \cap B_0 \neq \emptyset$. Moreover, if $d = 2$ then $C \cap \partial F' = \emptyset$.

The proof of Lemma 1.4.1 is analogous to the proof of the fact that the second Neumann eigenfunction cannot have a closed nodal line [28, p. 546]. We present the details in section 4.3.

Lemma 1.4.1 together with Theorems 1.2.3 and 1.2.4 immediately imply the following result.

Corollary 1.4.2. *Let $W \subset \mathbb{R}^d$ be as above and let ϕ_n be an eigenfunction of the sloshing problem (1.1.1) on W corresponding to an eigenvalue μ_n.*
(i) If W satisfies the weak John's condition, then $N_{\phi_2} \cap B_0 \neq \emptyset$. If, moreover, $d = 2$, then $N_{\phi_2} \cap \partial F' = \emptyset$.
(ii) If W satisfies the standard John's condition and $F' \subset \mathbb{R}^{d-1}$ is a convex set, then $C \cap B_0 \neq \emptyset$ for any connected component of the set $C \subset \mathcal{N}_{\phi_k}$, $k = 2, \dots, d$.

Geometric properties of nodal sets of sloshing eigenfunctions in two dimensions have been previously studied in [19, 17]. In fact, it was claimed in [19] that any nodal line of any sloshing eigenfunction must intersect the bottom of the container (i.e. the set B in our notation). However, in [17] a counterexample to this statement was constructed. At the same time, it was shown in [17, Theorem 3.1 (ii)] that this is indeed true for the nodal set $\mathcal{N}_{\phi_2}$. The first statement of Corollary 1.4.2 (i) can be viewed as a higher–dimensional generalization of this result for domains satisfying the weak John's condition. Note that in any dimension, the set $\mathcal{N}_{\phi_2}$ consists of a single connected component. This follows from the analogue of Courant's nodal domain theorem for sloshing problems (we note that while this theorem is stated in [19, 17] for planar domains only, the argument extends to higher dimensions in a straightforward way.)

It was also shown in [17, Corollary 3.4] that if a planar domain W satisfies the standard John's condition then the nodal line for the first nontrivial eigenfunction does not contain the endpoints of the free boundary F. The second part of Corollary 1.4.2 (i) extends this result to domains satisfying the *weak* John's condition.

Let us also remark that the proof of Corollary 1.4.2 is based on more elementary ideas (such as domain monotonicity of mixed Steklov eigenvalues) than the argument in [17].

1.5. **Plan of the paper.** In sections 2.1–2.4 we discuss some examples illustrating Theorems 1.2.3 and 1.2.4 and shedding more light on the geometric assumptions on the sets W, F and B. In sections 3.1 and

3.2 we review the results regarding domain monotonicity of eigenvalues for the mixed Steklov problems. While this property is well–known, it seems that it has not been stated in the literature in full strength. In particular, we show that domain monotonicity is *strict* which requires some extra work. Finally, in sections 4.1–4.3 the proofs of the main results are presented.

2. Examples

2.1. **Cylindrical domains.** Let $F' \subset \mathbb{R}^{d-1}$ be a bounded Lipschitz domain. Set $F = F' \times \{0\}$, $W = F' \times (-l, 0)$, $l > 0$, and $B = \partial W \setminus F$. Clearly, the cylindrical domain W satisfies the standard John's condition. By separation of variables it is easy to see that the eigenfunctions and eigenvalues of the problems (1.1.1) and (1.1.2) are given by

$$v_n(x, y) = \tilde{v}_n(x) \cosh(\sqrt{\tilde{\mu}_n}(y + l)), \quad \mu_n = \sqrt{\tilde{\mu}_n} \tanh(\sqrt{\tilde{\mu}_n} l) \quad (2.1.1)$$

and, respectively,

$$u_n(x, y) = \tilde{u}_n(x) \sinh(\sqrt{\tilde{\lambda}_n}(y + l)), \quad \lambda_n = \sqrt{\tilde{\lambda}_n} \coth(\sqrt{\tilde{\lambda}_n} l), \quad (2.1.2)$$

where $\{\tilde{v}_n\}$ and $\{\tilde{\mu}_n\}$ are the eigenfunctions and eigenvalues of the Neumann problem for the Laplacian on F' and $\{\tilde{u}_n\}$ and $\{\tilde{\lambda}_n\}$ are the eigenfunctions and eigenvalues of the Dirichlet problem for the Laplacian on F'.

By the classical inequalities between the Neumann and Dirichlet eigenvalues of the Laplacian, conjectured in [27] and proved in [11, 8], we have $\tilde{\mu}_{n+1} < \tilde{\lambda}_n$ for all $n = 1, 2 \dots$ in dimensions $d \geq 3$ (for $n = 1$ and $d = 3$ this inequality can be also deduced from [29] and [30, section 1.5]). Moreover, if F' is convex then $\tilde{\mu}_{n+d-1} \leq \tilde{\lambda}_n$ by [23]. If $d = 2$ then F' is just an interval of the real line, and an elementary calculation yields $\tilde{\mu}_{n+1} = \tilde{\lambda}_n$, $n = 1, 2, \dots$. Since $\tanh(\alpha) < 1 < \coth(\beta)$ for all $\alpha, \beta > 0$ we immediately obtain from (2.1.1) and (2.1.2) the assertions of Theorem 1.2.4 for cylindrical domains in any dimension.

As follows from section 1.3, for $d = 3$ the eigenvalue problem (1.1.1) in this example describes free fluid oscillations in a glass-like container $W = F' \times (-l, 0)$ with the free fluid surface $F = F' \times \{0\}$.

2.2. **Sloshing in a vase.** In this section we show that there exist domains satisfying the weak John's condition but not the standard John's condition.

For any $r > 0$, $h_2 < h_1 \leq 0$, let $L(r, h_2, h_1) \subset \mathbb{R}^d$ be a cylinder given by

$$L(r, h_2, h_1) = \{(x, y) \in \mathbb{R}^{d-1} \times (-\infty, 0] : |x| < r, \, h_2 \leq y \leq h_1\}.$$

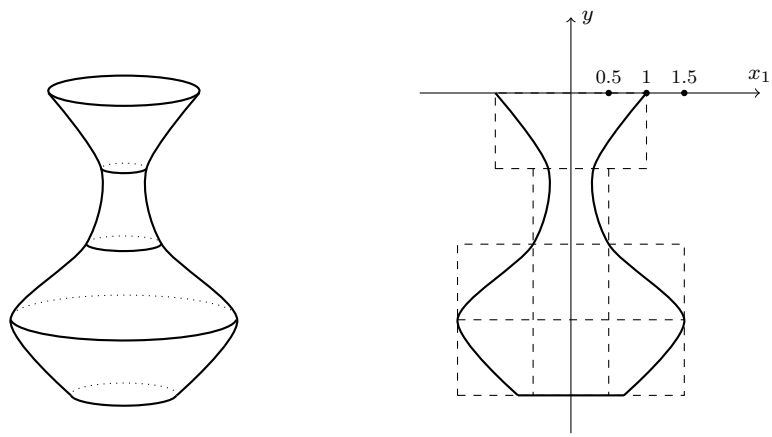

(A) Vase (B) Its projection

FIGURE 2. *Vase-like container satisfying the weak but not the standard John's condition.*

Let $W \subset \mathbb{R}^3$ satisfy assumptions (I) and (II) and

$$F' = \{(x_1, x_2) \in \mathbb{R}^2 : x_1^2 + x_2^2 < 1\}, \tag{2.2.1}$$

$$W \subset L(1, -1, 0) \cup L(0.5, -2, -1) \cup L(1.5, -4, -2). \tag{2.2.2}$$

Let us show that W satisfies the weak John's condition. It suffices to verify that for any $a > 0$,

$$\int_{L(1,-1,0)\cup L(0.5,-2,-1)\cup L(1.5,-4,-2)} e^{ay}\,dx\,dy \le \frac{|F'|}{a} = \int_{F'}\int_{-\infty}^{0} e^{ay}\,dy\,dx.$$

This is equivalent to the following inequalities:

$$\pi\left(\int_{-1}^{0} e^{ay}\,dy + (0.5)^2\int_{-2}^{-1} e^{ay}\,dy + (1.5)^2\int_{-4}^{-2} e^{ay}\,dy\right) \le \pi\int_{-\infty}^{0} e^{ay}\,dy,$$

$$\frac{1-e^{-a}}{a} + \frac{1}{4}\frac{e^{-a}-e^{-2a}}{a} + \frac{9}{4}\frac{e^{-2a}-e^{-4a}}{a} \le \frac{1}{a},$$

$$8e^{-2a} \le 3e^{-a} + 9e^{-4a},$$

$$0 \le 3e^{3a} - 8e^{2a} + 9. \tag{2.2.3}$$

Consider the function $f(x) = 3x^3 - 8x^2 + 9$. In order to prove (2.2.3) we need to show that $f(x) > 0$ for any $x \ge 0$. Indeed, by elementary calculus, $\min\{f(x) : x \ge 0\} = f(16/9) > 0$.

In Figure 2a we give an example of a domain W satisfying (2.2.1) and (2.2.2) that has the shape of a vase. Its projection on the (x_1, y)-plane

is presented in Figure 2b. The domain W is symmetric with respect to the y-axis and clearly does not satisfy the standard John's condition.

One can modify the previous example and construct domains in any dimension which satisfy the weak but not the standard John's condition. Indeed, let $W \subset \mathbb{R}^d$ be an arbitrary domain, satisfying the assumptions (I) and (II) of section 1.1, such that

$$F' = \{x \in \mathbb{R}^{d-1} : |x| < r_1\}, \tag{2.2.4}$$

$$W \subset L(r_1, h_1, 0) \cup L(r_2, h_2, h_1) \cup L(r_3, h_3, h_2), \tag{2.2.5}$$

$$0 < r_2 < r_1 < r_3,\ r_2^{d-1} + r_3^{d-1} \leq 2r_1^{d-1}, \tag{2.2.6}$$

$$0 \geq h_1 > h_2 > h_3,\ h_1 - h_2 \geq h_2 - h_3. \tag{2.2.7}$$

Since $r_1 < r_3$ we have $L(r_3, h_3, h_2) \not\subset F' \times (-\infty, 0)$ so W does not have to satisfy the condition $W \subset F' \times (-\infty, 0)$. One can show by an explicit calculation that under these assumptions W satisfies the weak John's condition. We leave the details to the interested reader.

Remark 2.2.8. Note that the conditions (2.2.1) and (2.2.2) are not a special case of (2.2.4 - 2.2.7) for $d = 3$ and some choice of r_1, r_2, r_3, h_1, h_2, h_3. We use a particular choice of the parameters in (2.2.1) and (2.2.2) in order to construct a domain W that has a vase-like shape which is natural in the context of the sloshing problem.

2.3. **Sloshing in a spherical container.** In this section we present an example showing that one can not remove the weak John's condition from the formulation of Theorem 1.2.3. We use spherical containers studied by McIver in [24]. Figure 3 shows such a container and its projection with the free surface contained in the x_1-axis.

McIver gives numerical results for various ratios of parameters d/c defined on Figure 3, see [24, Table 2] . In particular the second Steklov–Neumann eigenvalue for $d/c = 1.8$ equals 2.376 (after rescaling). This is not enough to get a contradiction by just comparing it with the first Steklov–Dirichlet eigenvalue of the cylinder contained in the spherical container. Indeed, the semi–infinite cylinder has the first Steklov–Dirichlet eigenvalue equal to 2.4048, and the corresponding eigenvalue of a truncated cylinder is even a little bit larger (see equation (2.1.2)).

We implemented McIver's numerical method to get the second Steklov–Neumann eigenvalue for $d/c = 1.9$. Our algorithm differs slightly from the original one. We used the standard numerical integration function in *Mathematica* to find values of integrals I_m instead of approximating integrands with Chebyshev polynomials (see [24, Appendix B]). Numerical results obtained using our method are virtually identical to those found by McIver.

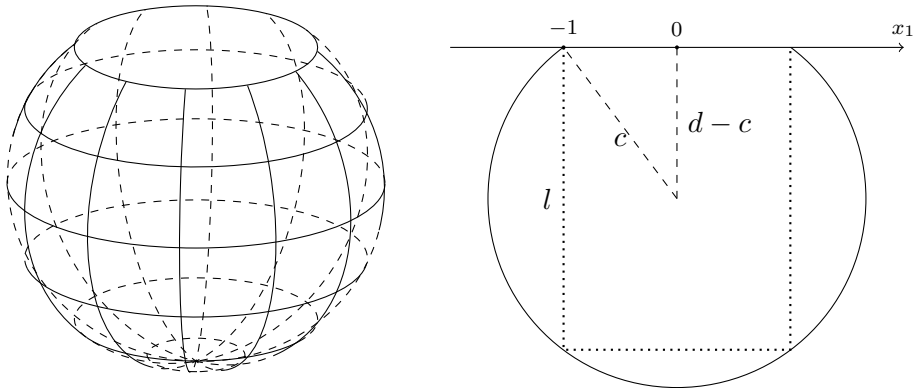

(A) Spherical container (B) Its projection

FIGURE 3. Spherical container with radius c filled up to level d, with circular aperture of radius 1. Dotted lines show cylindrical container of height l.

For $d/c = 1.9$, we found that the second Steklov–Neumann eigenvalue is equal to 2.51105. The biggest cylinder contained in such a spherical container has height $l = 4.13$. Using formula (2.1.2), we get that the first Steklov–Dirichlet eigenvalue of this cylinder is equal to 2.4048 (practically the same as for the semi–infinite cylinder). By domain monotonicity (see section 3.1) it is larger than the value of the first Steklov–Dirichlet eigenvalue of the spherical container, yet it is smaller than its second Steklov–Neumann eigenvalue. This gives a "counterexample" to our main result if the domain does not satisfy the weak John's condition. The latter could be verified directly: a numerical calculation shows that for the spherical container presented on Figure 3 the inequality (1.2.2) fails if $a > 0.08$ (in fact, one can check that if $d/c > 1$, the inequality (1.2.2) does not hold for sufficiently large a).

Note that our estimate of the Steklov–Dirichlet eigenvalue is quite crude; it would be interesting to establish the precise value of a "critical ratio" $\alpha \in (1, 1.9)$, such that Theorem 1.2.3 holds for spherical containers with $d/c < \alpha$ and fails for $d/c \geq \alpha$.

2.4. **The "ice fishing problem".** In this section we present another "counterexample" to Theorem 1.2.3, this time for an unbounded domain (cf. Remark 1.2.7). For $d = 3$, let $F' = \{x \in \mathbb{R}^2 : |x| < 1\}$ be the unit disk and set $F = F' \times \{0\}$, $W = \{(x, y) : x \in \mathbb{R}^2, y < 0\}$ and $B = \partial W \setminus F$. Even though the domain W is unbounded, it is well known (see [25] or [16]) that the eigenvalue problem (1.1.1) considered

in the function space

$$\mathcal{K} = \left\{ \int_{F'} u^2(x,0)\,dx < \infty, \int_W |\nabla u(x,y)|^2\,dx\,dy < \infty \right\}$$

has discrete spectrum satisfying

$$0 = \mu_1 < \mu_2 \le \mu_3 \le \ldots \to \infty.$$

A similar statement holds for problem (1.1.2).

Clearly, W does not satisfy the weak John's condition, and numerical calculations show that the assertion of Theorem 1.2.3 does not hold in this case. In fact, by [25, Table 2], $\mu_2 \approx 2.7547$ and by [2, eq. (2.15)], $\lambda_1 \le 2\pi/3 \approx 2.094$. Thus, $\mu_2 > \lambda_1$.

We remark that the eigenvalue problem (1.1.1) in this example describes the so called "ice fishing problem" (see [16]). That is, it describes free-fluid oscillations in the lower half-space $W = \{(x,y) : x \in \mathbb{R}^2, y < 0\}$ covered above by ice with an ice hole F.

We conclude by noting that in two dimensions, unbounded domains providing "counterexamples" to Theorem 1.2.3 can be constructed using infinite cylindrical domains, see Remark 4.1.1.

3. Domain monotonicity of mixed Steklov eigenvalues

In this section we sum up some facts regarding domain monotonicity of eigenvalues of mixed Steklov problems. These results are well–known and in various forms can be found in the literature (see, for example, [18, section 2.2] and references therein), however, since they are essential for the proofs of Theorem 1.2.4 and Lemma 1.4.1 we present them here in detail. A particular emphasis is made on *strict* domain monotonicity of mixed Steklov eigenvalues.

3.1. Steklov–Dirichlet problem.

The eigenvalues of the mixed Steklov–Dirichlet problem satisfy strict domain monotonicity in the following sense:

Proposition 3.1.1. *Let (W, F, B) and (W^*, F^*, B^*) be two triples of sets satisfying the assumptions (I) and (II) of section 1.1, such that $W \subset W^*$ and $F \subset F^*$. Let λ_n and λ_n^*, $n = 1, 2, \ldots$, be the eigenvalues of the problem (1.1.2) on W and W^*, respectively. Then $\lambda_n \ge \lambda_n^*$ for all $n \ge 1$. If, moreover, either W is a proper subset of W^* or F is a proper subset of F^*, then $\lambda_n > \lambda_n^*$ for all $n \ge 1$.*

Proof. First, note that the non-strict domain monotonicity follows immediately from the variational characterization (1.1.4). Indeed, continuing any test-function for the Steklov–Dirichlet problem on W by

zero one gets a test function on W^* with the same Rayleigh quotient. Therefore, $\lambda_n \geq \lambda_n^*$.

In order to prove strict monotonicity, we follow the argument presented in an abstract form in [31, Theorem 2.3]. First, assume by contradiction that W is a proper subset of W^* and $\lambda_n = \lambda_n^*$ for some $n \geq 1$. Let k be such that

$$\lambda_k^* > \lambda_n = \lambda_n^* \tag{3.1.2}$$

Consider k triples (W_i, F_i, B_i), $i = 1, \dots, k$, such that $W = W_1 \subset W_2 \subset \dots \subset W_k = W^*$ and $F = F_1 \subset F_2 \subset \dots \subset F_k = F^*$. Assume that W_i and F_i, $i = 1, \dots, k$, are Lipschitz and all the inclusions $W_i \subset W_{i+1}$, $i = 1, 2, \dots, k-1$, are proper. By non-strict domain monotonicity we have $\lambda_n = \lambda_n^{(1)} \geq \lambda_n^{(2)} \geq \dots \geq \lambda_n^{(k)} = \lambda_n^*$, where $\lambda_n^{(i)}$, $i = 1, \dots, k$, is the n-th eigenvalue of the corresponding Steklov–Dirichlet problem on W_i. Therefore, all the inequalities in the previous formula are equalities. Let $u_n^{(i)}$ be an eigenfunction corresponding to the eigenvalue $\lambda_n^{(i)}$; extending it by zero to $W^* \setminus W_i$ we may consider it as a function on W^*. Clearly, the functions $u_n^{(i)}$ $i = 1, \dots, k$ are admissible for the variational characterization (1.1.4) for λ_k^*. Let us show that they are all linearly independent. Suppose $\sum_{i=1}^k c_i u_n^{(i)} = 0$ on W^* and $c_k \neq 0$. Then $u_n^{(k)}$ is identically zero on $W^* \setminus W_{k-1}$, and hence by the unique continuation property of harmonic functions $u_n^{(k)} \equiv 0$ on W^*, which is impossible. Therefore, $c_k = 0$. Arguing the same way, we show that all the other coefficients $c_i = 0$. Taking the subspace generated by $u_n^{(1)}, \dots, u_n^{(k)}$ in the variational characterization of λ_k^*, we obtain $\lambda_k^* \leq \lambda_n$ which contradicts (3.1.2). This completes the proof of strict domain monotonicity in the case of the proper inclusion $W \subset W^*$.

If $W = W^*$ and F is a proper subset of F^* the proof is analogous. In the construction of auxiliary triples (W, F_i, B_i) we must assume that all the inclusions $F = F_1 \subset F_2 \subset \dots \subset F_k = F^*$ are proper. In order to prove linear independence of test-functions $u_n^{(1)}, \dots, u_n^{(k)}$ we must show that if for some $i = 1, \dots, k$ the function $u_n^{(i)}$ vanishes on $F_i \setminus F_{i-1}$, then it should vanish identically. Indeed, in this case the derivatives of $u_n^{(i)}$ are zero on $F_i \setminus F_{i-1}$ in all directions tangential to F_i. Moreover, since $u_n^{(i)}$ is an eigenfunction of the Steklov–Dirichlet problem on (W, F_i, B_i), its normal derivative also vanishes on $F_i \setminus F_{i-1}$. Therefore, $\nabla u_n^{(i)}$ vanishes on $F_i \setminus F_{i-1}$. Hence, a harmonic function u_n^i vanishes together with its gradient on a set of codimension one, which by [4, section 3] implies that it is identically zero. This completes the proof of the Proposition 3.1.1. $\square$

3.2. **Steklov–Neumann problem.** For eigenvalues of the Steklov–Neumann problem, domain monotonicity holds in a more restrictive sense than in the Steklov–Dirichlet case: namely, the "free boundary" parts of ∂W and ∂W^* (i.e. the sets F and F^*) must coincide.

Proposition 3.2.1. *Let (W, F, B) and (W^*, F, B^*) be two triples of sets satisfying the assumptions (I) and (II) of section 1.1, such that W is a proper subset of W^*. Let μ_n and μ_n^*, $n = 1, 2, \dots,$ be the eigenvalues of the problem (1.1.1) on W and W^*, respectively. Then $\mu_n < \mu_n^*$ for all $n \geq 2$.*

Proof. Let $v_1^*, \dots, v_n^*$ be the first n eigenfunctions of the problem (1.1.1) on W^*, $n \geq 2$. Consider the restrictions $v_1, \dots, v_n$ of these functions on the domain W. Clearly, they are linearly independent: if some linear combination of $v_1, \dots, v_n$ vanishes on W it should vanish on the whole W^* by unique continuation property of harmonic functions. Take the subspace generated by $v_1, \dots, v_n$ and plug it in the variational characterization (1.1.3) for μ_n. Suppose, by contradiction, that there exists an element v of this subspace such that

$$\frac{\int_W |\nabla v(x,y)|^2 \, dx \, dy}{\int_F v^2(x,0) \, dx} \geq \mu_n^*. \tag{3.2.2}$$

Let v^* be the extension of v to W^* — that is, the corresponding linear combination of $v_1^*, \dots, v_n^*$. The denominator of its Rayleigh quotient is exactly the same as in (3.2.2), since the boundaries of the domains W and W^* have the same "free surface" F. At the same time, since $v^*|_W = v$ and $W \subset W^*$, we immediately get

$$\int_{W^*} |\nabla v^*(x,y)|^2 \, dx \, dy \geq \int_W |\nabla v(x,y)|^2 \, dx \, dy.$$

Comparing this with (3.2.2) and using the variational characterization for μ_n^*, one gets that the inequality above has to be an equality. Therefore, ∇v vanishes on $W^* \setminus W$ and hence v^* is constant everywhere on W^* by the unique continuation property. Therefore, $\mu_n = \mu_n^* = 0$ which is impossible for $n \geq 2$ (note that for $n = 1$ this is indeed true). This completes the proof of Proposition 3.2.1. □

Remark 3.2.3. Proposition 3.1.1 is not surprising. The similar property holds for Dirichlet eigenvalues of the Laplacian and its proof is exactly the same. On the other hand, Proposition 3.2.1 is somewhat unexpected at first glance since the Neumann eigenvalues of the Laplacian do not have the domain monotonicity property. Even more counterintuitive in this case is the fact that monotonicity holds in the "unusual" direction, namely that smaller sets have smaller eigenvalues.

4. Proofs of the main results

4.1. **Proof of Theorem 1.2.4.** We develop the idea used in [18, Theorem 2.6]. Let $W \subset \mathbb{R}^d$ be a domain satisfying the standard John's condition. Then there exists $L > 0$ such that $W \subset F' \times (-L, 0)$. The result then immediately follows from Propositions 3.2.1 and 3.1.1 combined with the results of section 2.1, where the assertions of Theorem 1.2.4 have been established for cylindrical domains.

Remark 4.1.1. If W is an unbounded domain satisfying the standard John's condition (with the sloshing problem being understood in the appropriate sense, see Remark 1.2.7), one has to to set $L = \infty$, i.e. consider a semi–infinite cylindrical domain. Note that in two dimensions $\lambda_n = \mu_{n+1}$, $n = 1, 2, \dots$ for the semi–infinite strip. Hence, in order to prove Theorem 1.2.4, it is necessary to use strict domain monotonicity of eigenvalues for either the Steklov-Dirichlet or the Steklov-Neumann problem. Note that Propositions 3.1.1 and 3.2.1 remain true for mixed Steklov eigenvalues of unbounded domains: one can check that the proofs go through without changes.

The same example also shows that even a slight violation of the standard John's condition may force Theorem 1.2.4 to fail. Indeed, by strict domain monotonicity, an arbitrary enlargement of a semi–infinite cylindrical domain in two dimensions away from the line $\{y = 0\}$ yields $\lambda_n < \mu_{n+1}$.

4.2. **Proof of Theorem 1.2.3.** The argument presented below is an adaptation of the method introduced in [8].

Recall that the eigenfunctions $\{v_n\}_{n=1}^{\infty}$ of the Neumann problem (1.1.1) belong to the Sobolev space $H^1(W)$ and that they may be chosen so that $\{v_n(x, 0)\}_{n=1}^{\infty}$ is an orthonormal basis in $L^2(F')$.

Moreover, if we define the Neumann counting function by

$$\Lambda_N(\mu) = \#\{\mu_n : \mu_n \le \mu\}$$

we have

$$\Lambda_N(\mu) = \max\{\dim(L) : \frac{\int_W |\nabla v(x, y)|^2 \, dx \, dy}{\int_{F'} v^2(x, 0) \, dx} \le \mu, \quad v \in L\}, \tag{4.2.1}$$

where the maximum is taken over all linear subspaces L of $H^1(W)$. This follows from the variational principle (1.1.3).

The eigenfunctions of the Steklov–Dirichlet problem (1.1.2) $\{u_n\}_{n=1}^{\infty}$ also belong to $H^1(W)$ and, similarly, u_n may be chosen in such a way that $\{u_n(x, 0)\}_{n=1}^{\infty}$ is an orthonormal basis in $L^2(F')$.

As in section 1.1, we use the notation

$$H_0^1(W, B) = \{u \in H^1(W) : u \equiv 0 \quad \text{on} \quad B\}.$$

For any $\mu \in \mathbb{R}$, let $K_N(\mu)$ be the corresponding eigenspace of the problem (1.1.1) if μ is an eigenvalue, and let $K_N(\mu) = \{0\}$ otherwise.

Denote by $\mathcal{H} = \{(x, y) : x \in \mathbb{R}^{d-1}, y < 0\}$ the lower half-space of $\mathbb{R}^d$. The following lemma will be used in the sequel.

Lemma 4.2.2. *Let $W \subset \mathcal{H}$ be a domain satisfying the assumptions (I) and (II) of section 1.1. Then*

$$H_0^1(W, B) \cap K_N(\mu) = \{0\}.$$

for any $\mu > 0$.

Proof. Let $v \in H_0^1(W, B) \cap K_N(\mu)$. Consider the function $w : \mathcal{H} \to \mathbb{R}$ defined by

$$w(x, y) = \begin{cases} v(x, y), & (x, y) \in W, \\ 0, & (x, y) \in \mathcal{H} \setminus W. \end{cases}$$

Since $w \in H^1(\mathcal{H})$, for any $\psi \in C_0^\infty(\mathcal{H})$ we have by the Green's formula:

$$\int_H \nabla w \, \overline{\nabla \psi} \, dx \, dy = \int_W \nabla v \, \overline{\nabla \psi} \, dx \, dy = \int_{\partial W} \frac{\partial v}{\partial \nu} \, \overline{\psi} \, d\sigma = 0, \qquad (4.2.3)$$

where σ is the $(d-1)$-dimensional Lebesgue measure on ∂W. It is used here that $v \subset K_N(\mu)$ is harmonic and $\partial v / \partial \nu$ vanishes on $B \subset \partial W$, while ψ vanishes on $\partial W \setminus B \subset \partial \mathcal{H}$. It is well-known that a weakly harmonic function is harmonic, and therefore (4.2.3) implies that $\Delta w \equiv 0$ in $\mathcal{H}$. Since $\mathcal{H} \setminus W$ has a nonempty interior, the relation $w \equiv 0$ on $\mathcal{H} \setminus W$ implies $w \equiv 0$ on $\mathcal{H}$. This completes the proof of the lemma. □

Let us now fix an arbitrary $k \in \mathbb{N}$ and set $\mu = \lambda_k$. Take $U = \operatorname{span}\{u_1, \ldots, u_k\}$, where u_n are the eigenfunctions of the mixed Steklov–Dirichlet problem (1.1.2). We have $U \subset H_0^1(W, B) \subset H^1(W)$ and $\dim(U) = k$. For any $u \in U$, we have

$$\int_W |\nabla u(x, y)|^2 \, dx \, dy = \int_{F'} \frac{\partial u}{\partial y}(x, 0) u(x, 0) \, dx \\ \leq \mu \int_{F'} u^2(x, 0) \, dx. \qquad (4.2.4)$$

The rest of the proof is split into two cases: (i) $d \geq 3$ and (ii) $d = 2$.

Case (i), $d \geq 3$.

By Lemma 4.2.2 we get that $U \dot{+} K_N(\mu)$ is a direct sum. Given $\mu > 0$, consider the family of exponential functions

$$\Big\{ e^{i\omega x} e^{\mu y} : |\omega| = \mu, \, \omega \in \mathbb{R}^{d-1}, \quad (x, y) \in \mathbb{R}^{d-1} \times (-\infty, 0] \Big\}.$$

It is well-known that these functions are linearly independent. Thus there exists $\omega \in \mathbb{R}^{d-1}$, $|\omega| = \mu$ such that $e^{i\omega x}e^{\mu y}$ does not belong to $U\dot{+}K_N(\mu)$. Set

$$G = U\dot{+}K_N(\mu)\dot{+}\Big\{ce^{i\omega x}e^{\mu y} : c \in \mathbb{C}\Big\} \subset H^1(W).$$

Since W satisfies the weak John's condition (1.2.2), we have

$$\begin{aligned}\int_W |\nabla(ce^{i\omega x}e^{\mu y})|^2\,dx\,dy &= 2\mu^2|c|^2\int_W e^{2\mu y}\,dx\,dy \\ &\le \mu|c|^2|F'| = \mu\int_{F'}|ce^{i\omega x}e^{\mu\cdot 0}|^2\,dx.\end{aligned} \tag{4.2.5}$$

Let $u + v + ce^{i\omega x}e^{\mu y}$, be an element of G, where $u \in U$, $v \in K_N(\mu)$. We have

$$\begin{aligned}&\int_W |\nabla(u(x,y) + v(x,y) + ce^{i\omega x}e^{\mu y})|^2\,dx\,dy \;= \\ &\int_W |\nabla u(x,y)|^2 + |\nabla v(x,y)|^2|\nabla(ce^{i\omega x}e^{\mu y})|^2\,dx\,dy + \\ &2\,\mathrm{Re}\int_W \nabla v(x,y)\overline{\nabla(u(x,y) + ce^{i\omega x}e^{\mu y})} + \\ &\nabla(ce^{i\omega x}e^{\mu y})\overline{\nabla u(x,y)}\,dx\,dy \;= \mathcal{I}_1 + 2\,\mathrm{Re}\,\mathcal{I}_2,\end{aligned} \tag{4.2.6}$$

where $\mathcal{I}_1$ and $\mathcal{I}_2$ denote, respectively, the first and the second integral in the right hand side of (4.2.6). By (4.2.4), (4.2.5) and the definition of $K_N(\mu)$, we have

$$\mathcal{I}_1 \le \mu\int_{F'} u^2(x,0) + v^2(x,0) + |ce^{i\omega x}e^{\mu\cdot 0}|^2\,dx. \tag{4.2.7}$$

Note that the functions u, v and $e^{i\omega x}e^{\mu y}$ are harmonic in W. Furthermore, $u \equiv 0$ and $\partial v/\partial\nu \equiv 0$ on B. Hence, integrating by parts, we get

$$\begin{aligned}\mathcal{I}_2 &= \int_{F'}\frac{\partial v}{\partial y}(x,0)\overline{u(x,0) + ce^{i\omega x}} + \frac{\partial}{\partial y}(ce^{i\omega x}e^{\mu y})\,|_{y=0}\,\overline{u(x,0)}\,dx \\ &+ \int_B \frac{\partial v}{\partial\nu}(x,y)\overline{u(x,y) + ce^{i\omega x}e^{\mu y}} + \left(\frac{\partial}{\partial\nu}(ce^{i\omega x}e^{\mu y})\right)\overline{u(x,y)}\,d\sigma(x,y) \\ &- \int_W \Delta v(x,y)\overline{u(x,y) + ce^{i\omega x}e^{\mu y}} + \Delta(ce^{i\omega x}e^{\mu y})\overline{\nabla u(x,y)}\,dx\,dy \\ &= \mu\int_{F'} v(x,0)\overline{u(x,0) + ce^{i\omega x}} + ce^{i\omega x}\overline{u(x,0)}\,dx.\end{aligned} \tag{4.2.8}$$

It follows from (4.2.6), (4.2.7) and (4.2.8) that

$$\int_W |\nabla(u(x,y)+v(x,y)+ce^{i\omega x}e^{\mu y})|^2\,dx\,dy \leq \mu\int_{F'} |u(x,0)+v(x,0)+ce^{i\omega x}e^{\mu\cdot 0}|^2\,dx.$$

Therefore, from (4.2.1) we have

$$\Lambda_N(\mu) \geq \dim G = k + \dim K_N(\mu) + 1.$$

Since $\mu = \lambda_k$, we get

$$\#\{\mu_n : \mu_n < \mu\} = \Lambda_N(\mu) - \dim K_N(\mu) \geq k+1,$$

which implies $\mu_{k+1} < \lambda_k$.

Case (ii), $d = 2$.

Consider the functions $e^{i\mu x}e^{\mu y}$, $(x,y) \in \mathbb{R}\times(-\infty,0]$. Note that this function does not belong to U because it does not vanish on B. Set

$$G = U \dot{+} \left\{ce^{i\mu x}e^{\mu y} : c \in \mathbb{C}\right\} \subset H^1(W)$$

By the same estimates as in the case $d \geq 3$, we obtain that for any $u + ce^{i\mu x}e^{\mu y}$, where $u \in U$,

$$\int_W |\nabla(u(x,y)+ce^{i\mu x}e^{\mu y})|^2\,dx\,dy \leq \mu\int_{F'} |u(x,0)+ce^{i\mu x}e^{\mu\cdot 0}|^2\,dx.$$

Hence, $\Lambda_N(\mu) \geq \dim\{G\} = k+1$. Since $\mu = \lambda_k$, we get

$$\#\{\mu_n : \mu_n \leq \mu\} = \Lambda_N(\mu) \geq k+1,$$

which implies $\mu_{k+1} \leq \lambda_k$. This completes the proof of Theorem 1.2.3.

Remark 4.2.9. Theorem 1.2.3 can be viewed as a generalization of the main result of [8]. Indeed, in order to obtain the classical inequalities between the Neumann and Dirichlet eigenvalues one has to apply Theorem 1.2.3 to a cylindrical domain of depth L and take $L \to \infty$ (see section 2.1). Note that unlike the proof of Theorem 1.2.4, the proof of Theorem 1.2.3 uses the methods of [8], but not the results themselves.

Remark 4.2.10. It is likely that for $d = 2$, the assertion of Theorem 1.2.3 could be replaced by a strict inequality. However, this can not be proved using our argument.

4.3. **Proof of Lemma 1.4.1.** Let ϕ be an eigenfunction of the Steklov–Neumann problem (1.1.1) with the eigenvalue μ and let C be a connected component of its nodal set. First, note that $C \cap \partial W \neq \emptyset$. Indeed, otherwise C would enclose a bounded domain, and the harmonic function ϕ would vanish on its boundary, implying $\phi \equiv 0$.

Suppose that C has a non-empty intersection only with the part $\overline{F}$ of the boundary. Consider the domain D bounded by C and $\overline{F}$. Since ϕ does not change sign inside D, the eigenvalue μ is the first eigenvalue of the Steklov–Dirichlet problem in D. By Proposition 3.1.1 we get $\mu > \lambda_1$, where λ_1 is the first Steklov–Dirichlet eigenvalue of W. This is a contradiction with the assumption $\mu \leq \lambda_1$ of the lemma. Hence, $C \cap B_0 \neq \emptyset$.

Suppose now that $d = 2$. Then C is a curve and, by the argument above, one of its ends belongs to the set B_0. Suppose that the other end of C coincides with one of the end-points of the interval F'. Then ϕ is an eigenfunction of a mixed Dirichlet–Neumann eigenvalue problem on the domain bounded by B and C with the eigenvalue zero. But then $\phi \equiv \text{const}$, hence $\phi \equiv 0$, and we get a contradiction. This completes the proof of Lemma 1.4.1.

Acknowledgments. The authors would like to thank A. Girouard and N. Kuznetsov for useful discussions.

References

[1] M. S. Agranovich, *On a mixed Poincare–Steklov type spectral problem in a Lipschitz domain*, Russ. J. Math. Phys. 13(3), (2006), 281-290.

[2] R. Bañuelos, T. Kulczycki, *The Cauchy process and the Steklov problem*, J. Funct. Anal. 211 (2004), no. 2, 355–423.

[3] F. Brock, *An isoperimetric inequality for eigenvalues of the Stekloff Problem*, Z. Angew. Math. Mech. 81 (2001), 69-71.

[4] L. Caffarelli, A. Friedman, *Partial regularity of solutions of linear and superlinear elliptic equations*, J. Diff. Equations 60 (1985), 420-433.

[5] E. B. Davies, *Spectral theory and differential operators*, Cambridge University Press, 1995.

[6] B. Dittmar, A. Yu. Solynin, *The mixed Steklov eigenvalue problem and new extremal properties of the Grötzsch ring*, J. Math. Sci. 115(2) (2003), 2119-2134

[7] L. Euler, *Principia motus fluidorum*, Novi Commentarii Academiae Scientiarum Imperialis Petropolitanae, Tom. VI (1761), 271-311.

[8] N. Filonov, *On an inequality between Dirichlet and Neumann eigenvalues for the Laplace operator*, St. Petersburg Math. J. 16(2) (2005), 413-416.

[9] D. W. Fox, J. R. Kuttler, *Sloshing frequencies*, Z. Angew. Math. Phys. 34 (1983), 668–696.

[10] A. Fraser, R. Schoen, *The first Steklov eigenvalue, conformal geometry, and minimal surfaces*, arXiv:0912:5392.

[11] L. Friedlander, *Some inequalities between Dirichlet and Neumann Eigenvalues.* Arch. Rational Mech. Aanl. 116 (1991), 153-160.

[12] A. Girouard, I. Polterovich, *On the Hersch–Payne–Schiffer inequalities for Steklov eigenvalues*, arXiv:0808:2968, to appear in Func. Anal. Appl.

[13] P. Henrici, B. Troesch, L. Wuytack, *Sloshing frequencies for a half-space with circular or strip-like aperture*, Z. Angew. Math. Phys. 21 (1970), 285-318.

[14] R. Ibrahim, *Liquid sloshing dynamics. Theory and applications*, Cambridge University Press, 2005.

[15] N. D. Kopachevsky, S. G. Krein, *Operator approach to linear problems of hydrodynamics, Vol. 1: Self–adjoint problems for an ideal fluid*, Birkhäuser, 2001.

[16] V. Kozlov, N. Kuznetsov, *The ice-fishing problem: the fundamental sloshing frequency versus geometry of holes*, Math. Meth. Appl. Sci. 27 (2004), 289–312.

[17] V. Kozlov, N. Kuznetsov, O. Motygin, *On the two-dimensional sloshing problem*, Proc. Roy. Soc. London A. 460 (2004), 2587–2603.

[18] T. Kulczycki and N. Kuznetsov, *'High spots' theorems for sloshing problems*, Bull. Lond. Math. Soc. 41(3) (2009), 495–505.

[19] J.R. Kuttler, *A nodal line theorem for the sloshing problem*, SIAM J. Math. Anal. 15 (1984), No. 6, 1234-1237.

[20] N. Kuznetsov, V. Maz'ya, B. Vainberg, *Linear water waves*, Cambridge University Press, 2002.

[21] N. G. Kuznetsov, O. V. Motygin, *The Steklov problem in a half-plane: the dependence of eigenvalues on a piecewise constant coefficient*, J. Math. Sciences 127 (2005), 2429–2445.

[22] H. Lamb, *Hydrodynamics*, Cambridge University Press, 1932.

[23] H. Levine and H. Weinberger, *Inequalities between Dirichlet and Neumann eigenvalues*, Arch. Rational Mech. Anal. 94 (1986), no. 3, 193–208.

[24] P. McIver, *Sloshing frequencies for cylindrical and spherical containers filled to an arbitrary depth*, J. Fluid Mech. 201 (1989), 243–257.

[25] J. W. Miles, *On the eigenvalue problem for fluid sloshing in a half-space*, Z. Angew. Math. Phys. 23 (1972), 861–869.

[26] N. N. Moiseev, *Introduction to the theory of oscillations of liquid-containing bodies*, Advances in Applied Mechanics, Vol. 8 pp. 233–289 Academic Press, New York (1964).

[27] L.E.Payne, *Inequalities for eigenvalues of plates and membranes*, J. Rational Mech. Anal. 4 (1955), 517-529.

[28] Å. Pleijel, Remarks on Courant's nodal line theorem, Comm. Pure Appl. Math. 9 (1956), 543-550.

[29] G. Pólya, *Remarks on the foregoing paper*, J. Math. Phys. 31 (1952), 55-57.

[30] G. Szegö, *Inequalities for certain eigenvalues of a membrane of a given area*, J. Rational Mech. Anal. 3 (1954), 343-356.

[31] W. Welsh, *Monotonicity for eigenvalues of the Schrödinger operator on unbounded domains*, Arch. Rational Mech. Anal. 49 (1972/73), 129-136.

Rodrigo Bañuelos, Department of Mathematics, Purdue University, West Lafayette, IN 47907, USA
E-mail address: banuelos@math.purdue.edu

Tadeusz Kulczycki, Institute of Mathematics, Polish Academy of Sciences, ul. Kopernika 18, 51-617 Wrocław, Poland
Institute of Mathematics, Technical University of Wrocław, Wybrzeze Wyspianskiego 27, 50-370 Wrocław, Poland
E-mail address: tkulczycki@impan.pl

Iosif Polterovich, Département de mathématiques et de statistique, Université de Montréal, CP 6128 succ. Centre-Ville, Montréal, QC H3C 3J7, Canada
E-mail address: iossif@dms.umontreal.ca

Bartłomiej Siudeja, Department of Mathematics, University of Illinois at Urbana-Champaign, 1409 W. Green Street, Urbana, IL 61801, USA
E-mail address: siudeja@illinois.edu